PT. KARYA CIPTA UNGGUL NUSANTARA

PKF DETAIL DRAWING

TYPE :	SIZE :	SPECIES :	PO :
STABLE 1L flat head unglazed	44 X 838 X 1981	Meranti	(Mendes)

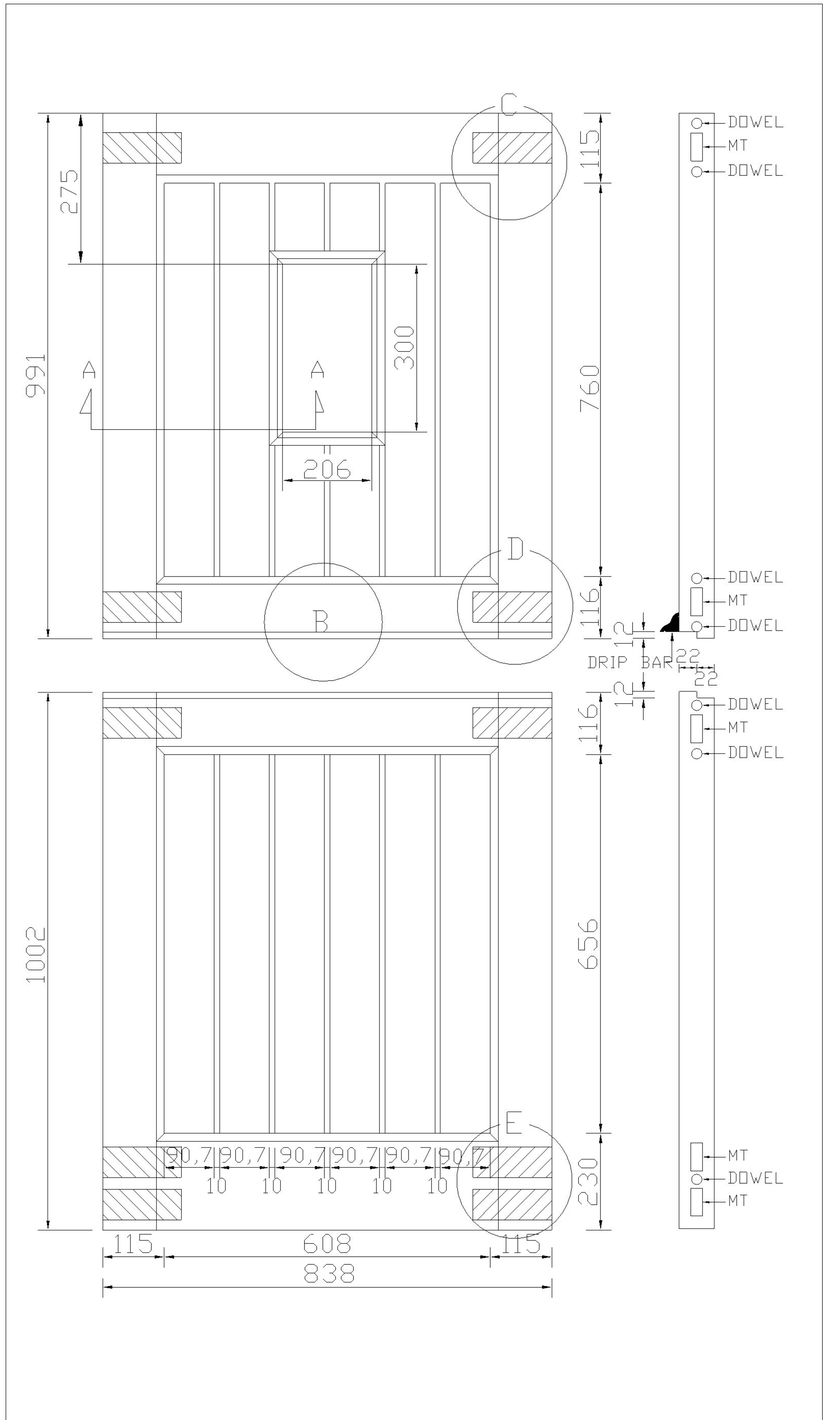

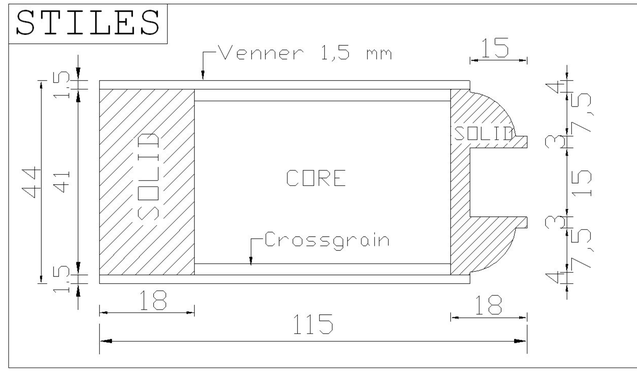

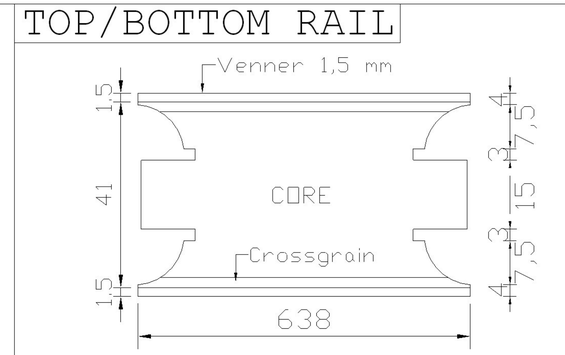

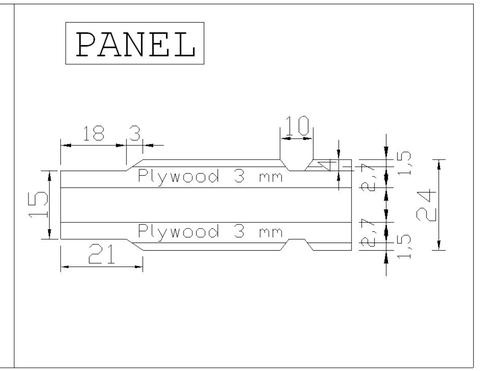

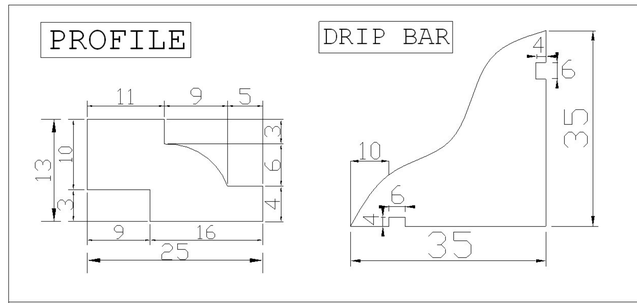

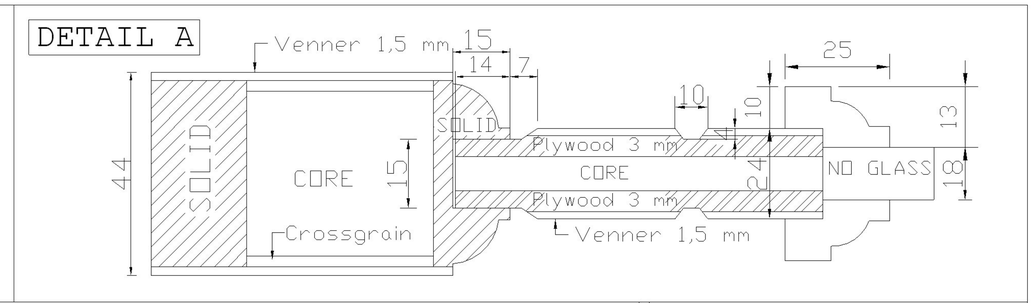

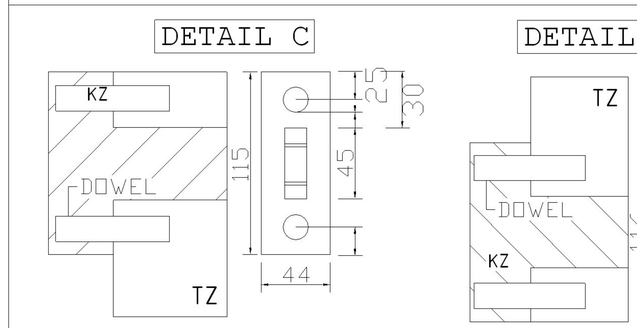

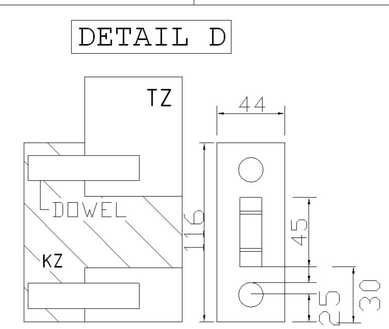

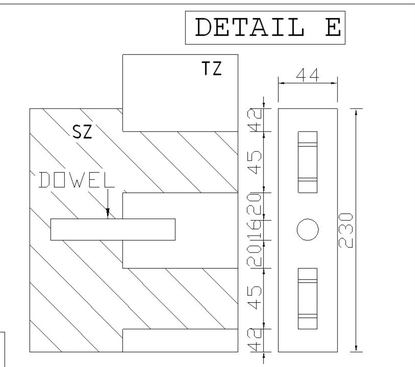

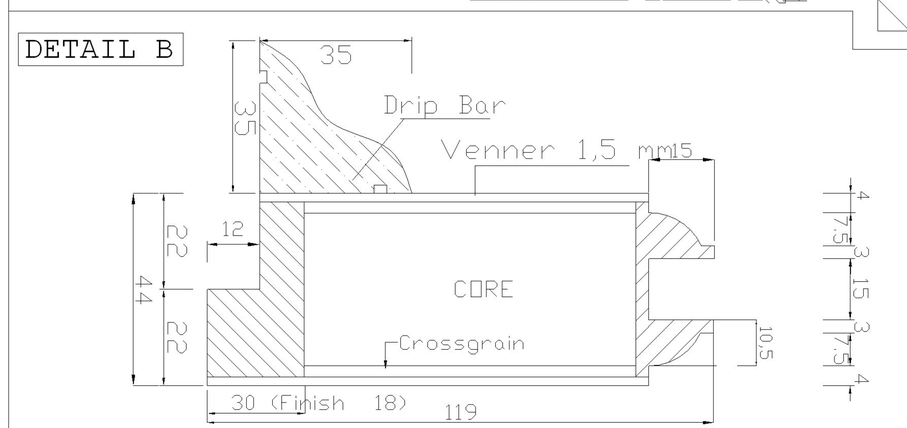

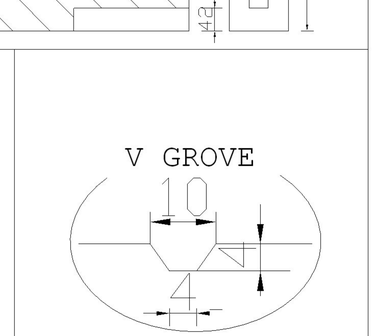

CORECTION BY	APPROVED BY